Qwest Optical Networking Testbed
JET Workshop

Mark Stine, CTO
Government Services Division
May 17, 2005

Qwest
Spirit of Service™

Outline

- Qwest Packet/Optical Network
- Metro Optical Networking
- Metro Optical Ethernet
- Ultra Long Haul Optical Transport

Optical Testbed / Field Trials

- Qwest utilizes its Littleton Laboratory for its testbed
- Vendor's facility for performance testing
- Field Trials utilizing its fiber and wavelengths for validation

Qwest Multi-service, Packet Centric Infrastructure

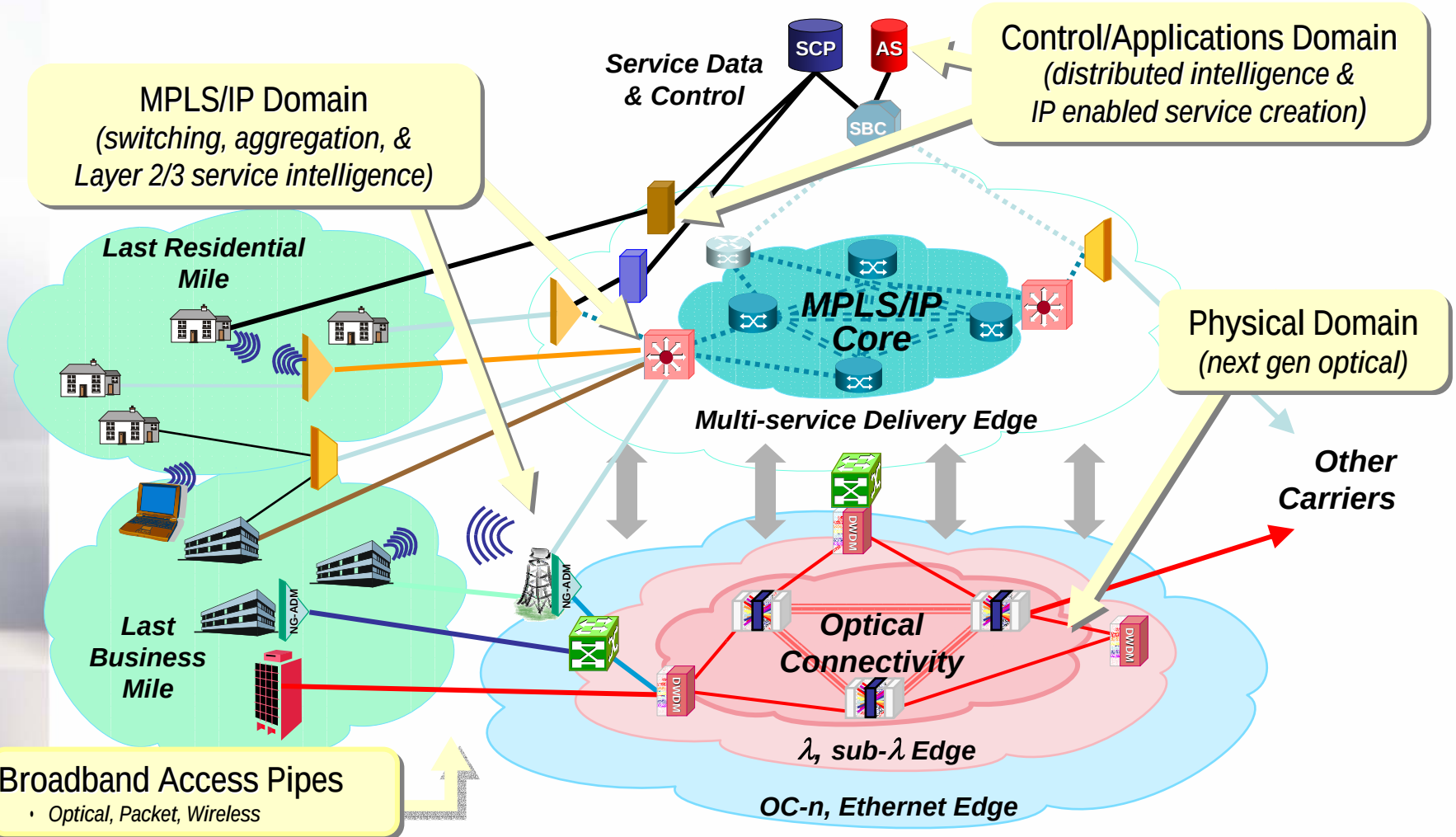

Qwest Spirit of Service™

Qwest OC-192 MPLS Network

- First NSP to deploy a fully meshed OC-192 backbone
- Availability: 100%
- Multiple protocol label switching (MPLS) fast re-route for redundancy in the network
- Over 2200 access POPs to bring your traffic onto the network
- On-net and off-net service level agreements

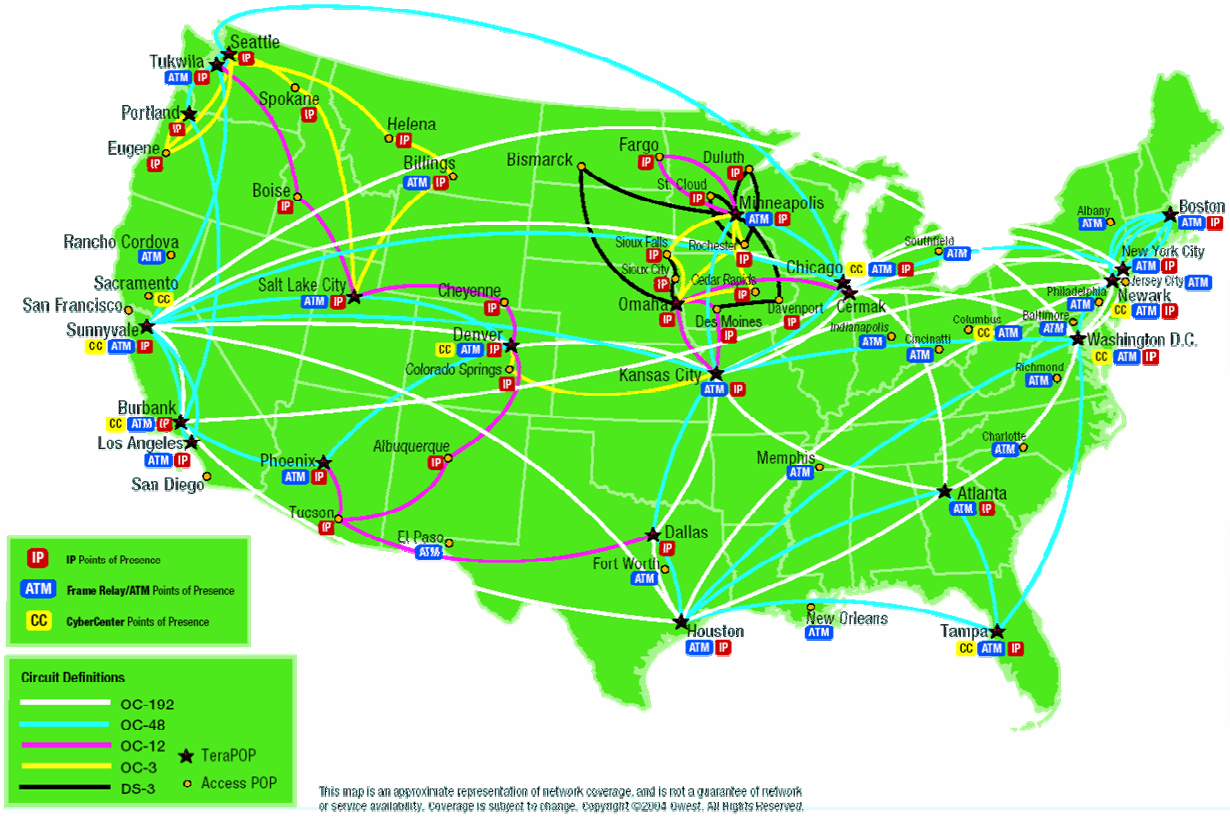

Qwest Spirit of Service™

The IP Backbone Today

- **Traditional Tier 1 ISP backbone originally built in 1998**
- **Initially engineered for Internet services such as DIA and Web Hosting with Best Effort QoS requirements**
- **1 + 1 redundancy model for every component built into architecture**
- **Design philosophy based on keeping things simple**
- **MPLS enabled for Fast ReRoute purposes on OC192s**
- **On-net transport facilities using DWDM and SONET infrastructure**
- **Extensive peering with 99% of transit traffic using private peering interconnects**
- **Evolved to support VPN and VoIP services**
- **Footprint covers USA and Asia**
- **Proven reliable, flexible, and cost-effective infrastructure**
- **Platforms**
  - TeraPoP Core is Juniper M160
  - Access Pop Core is a mixture of M160s, M40's and M20's depending on demand
  - Private Edge is Juniper M40 and Cisco 7600
  - Public Edge is Juniper M40, Juniper M20, Cisco 10K, Cisco GSR, Cisco 7600, Cisco 7200

Qwest
Spirit of Service™

Qwest® Global Presence

Global Coverage **Global Coverage**

Qwest is in the process of requesting regulatory authorization in AZ, CO, ID, IA, MN, MT, NE, NM, ND, OR, SD, UT, WA, and WY to provide interLATA long distance service originating; interLATA 8XX service terminating; or interLATA private line or data circuits with either end in these states, and Internet services without a required Global Service Provider (GSP). These services will not be available until regulatory authorization is received relating to each state.

Qwest's Global Presence is offered through third-party agreeements.

Qwest.

Qwest Fiber Network

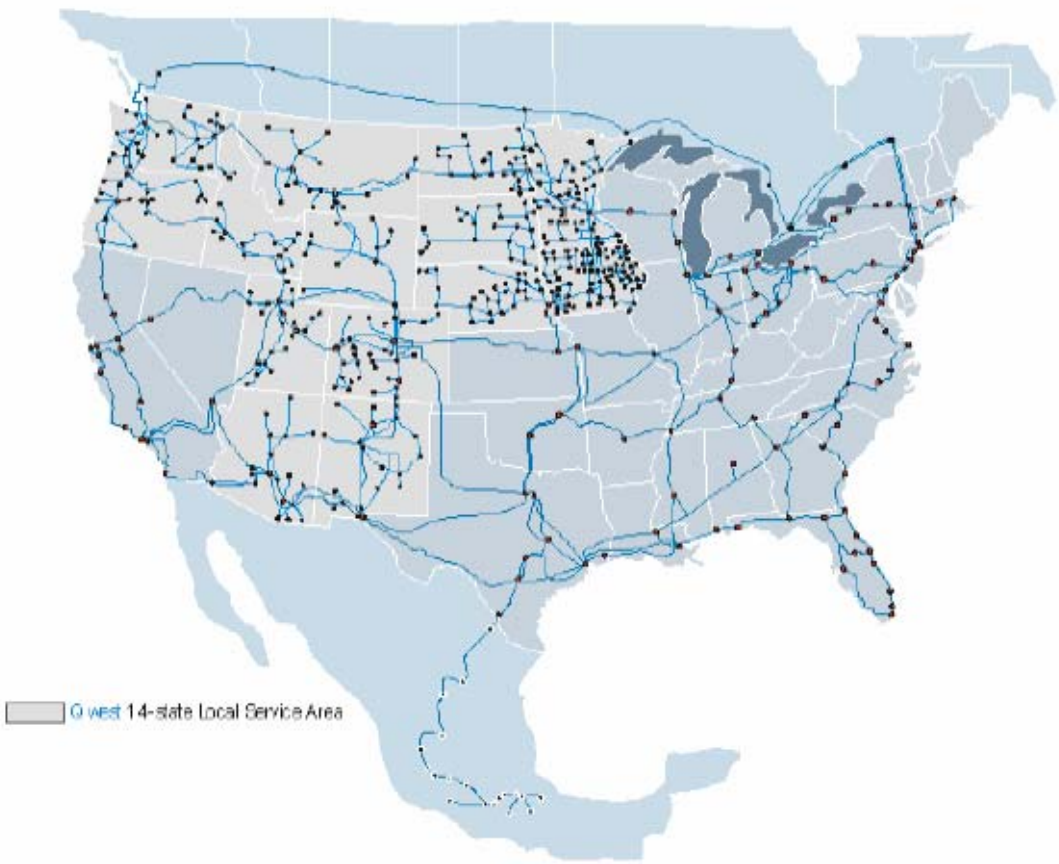

- ***Local service provider in 14 western states***
  - Over 16 million local access lines
  - Offer inter-LATA long-distance services in all 14 states
- ***Highest capacity nationwide fiber optic network***
  - 100% Qwest-owned backbone
  - Provides reach to follow our customers out of region
- ***Positioned to meet future opportunities***
  - Extensive local depth combined with high-capacity, data-centric network

Qwest
Spirit of Service™

Optical Transport Architecture

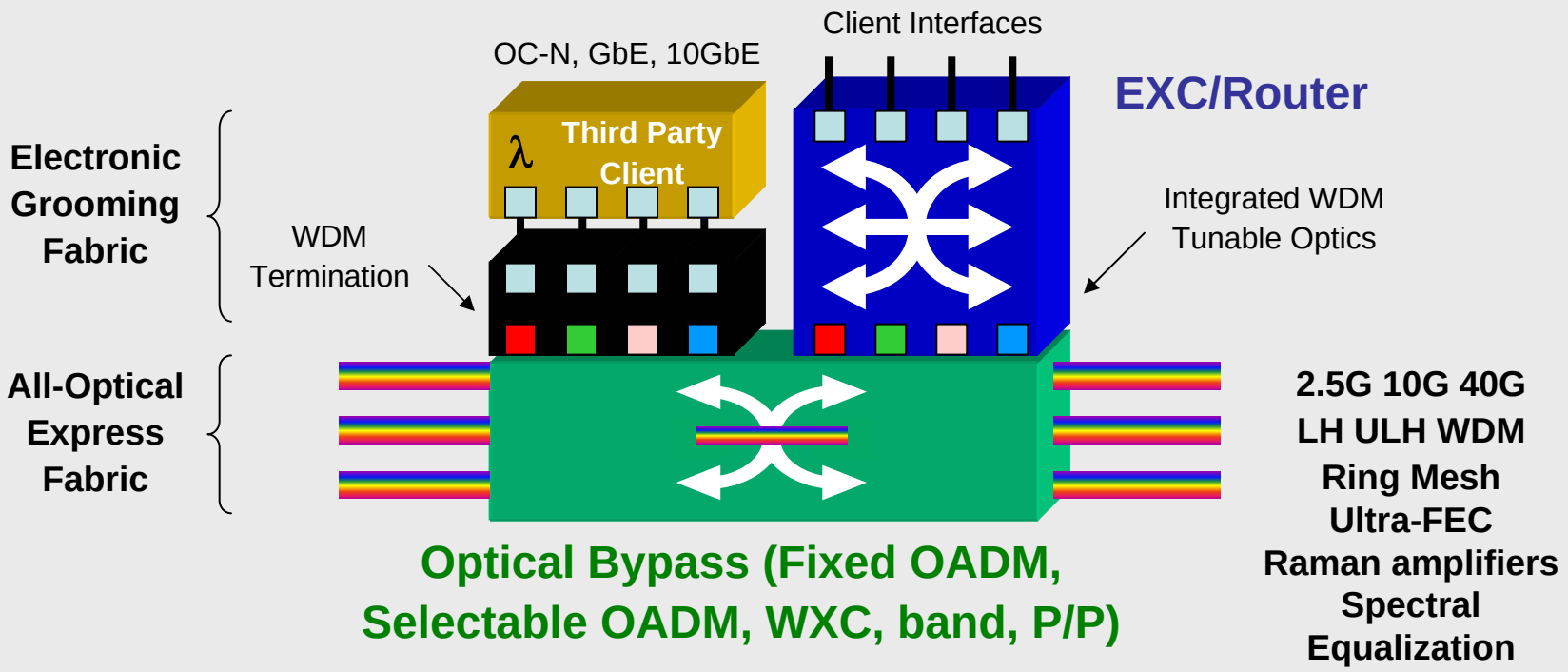

Combine Electronic and Optical Switch Fabrics to achieve Optimum Hybrid Switching Solution

Optical Focus

- **Metro Optical Networking**
  - Large scale EXC/MSPP with optical interfaces
  - 160Gbps-1.28Tbps capacity
  - OC-3c – OC-768(c)
  - VCAT combined with L2 capabilities
- **Metro Optical Ethernet**
  - Carrier grade L2 devices
  - Options for MPLS or VLAN traffic management/organization
  - Ethernet over dark fiber and over DWDM
  - Fast-E through 10G LAN PHY
- **Ultra Long Haul Optical Transport**
  - Expansion of Ethernet in carrier transport space
  - Agile optical switching (OXCs, ROADMs)
  - Integrated 10G and 40G DWDM systems
  - Raman amplification options
  - G.709 digital wrappers
  - Ultra FEC

Qwest
Spirit of Service™

Metro Optical Network

- **Trialed and Deployed in 2004 next generation multi service aggregation and grooming switch in 14 states**
- **High density capacity/density**
  - Up to 640Gb capacity in ½ bay
  - In-service upgrades from 160G to 320G to 640G
  - Up to 1.28Tb of traffic in a single bay
- **Interfaces from DS-3 to OC-768**
- **Standards compliant UPSR, 2F/4F BLSR, Trans-oceanic ring terminations**
- **Fully non-blocking STS-1 level grooming**
- **Designed for metro hub and backbone feeder applications**
- **Smooth evolution from Rings to GMPLS Mesh**

Qwest
Spirit of Service™

Metro Optical Ethernet

- 1 GbE Rollout in major cities
- 10GbE Rollout in the San Francisco Bay Area
  - Interfaces to inexpensive 10 GbE LAN PHY router interface
  - Currently finalizing troubleshooting procedures and support

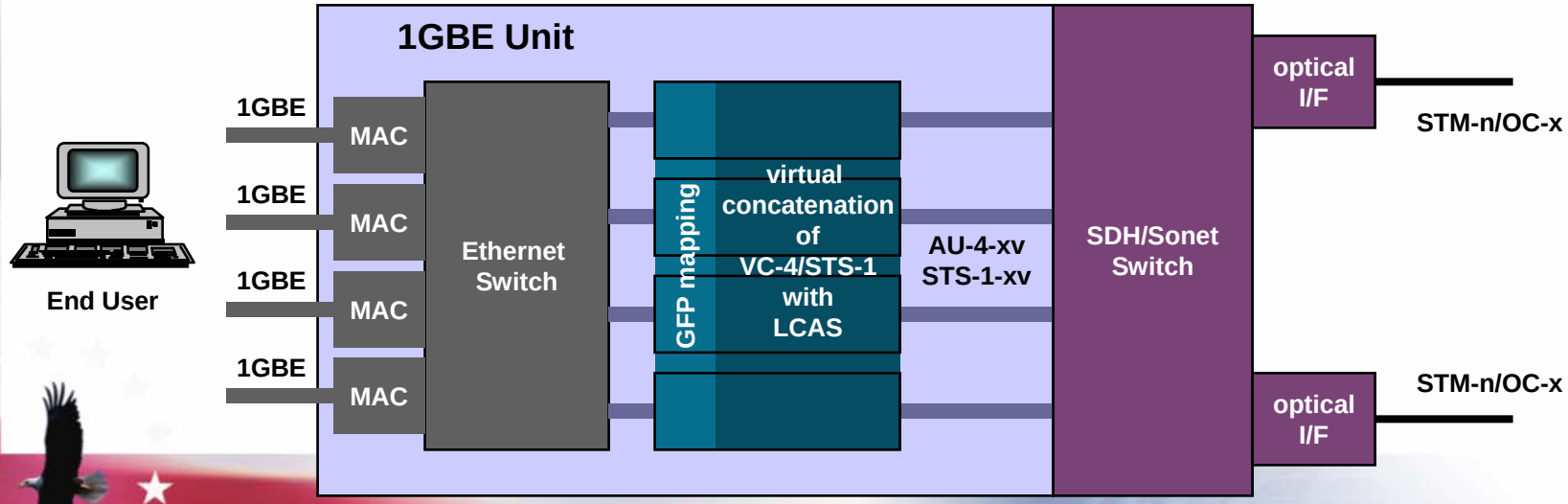

Qwest
Spirit of Service™

Ultra Long Haul Field Trials

- In 2004, 10G/40G Field Trial
- In 2005, Nationwide Field Trial of All Raman 10G/40G ULH
- In 2006, 40G Coherent Modulation

Qwest
Spirit of Service™

In 2004, 10G/40G Field Trial Validated

- ULH DWDM propagation of 85+ 10 Gbps channels at >3000 km with mixed span lengths on Qwest TWC fiber
- 3x40Gbps and 88x10Gbps propagated over 1516 km
- Fiber's PMD is adequate for 40G

- **System performance met or exceeded all key advertised features and satisfied Qwest requirements**
  - Very good performance as measured by both pre- and post-FEC BER
- **Key caveats**
  - System was based mostly upon GA or near GA equipment and results are realizable in real world
  - Configuration is not fully optimal and better performance may be achieved
    - PMD not known (probably very low – less than .07ps/sqrt-km)
    - CD map optimized for 10Gbps (but sufficient for 40Gbps)
  - The results do not include tolerances for best practice engineering (link margins, end-of-life, etc…)

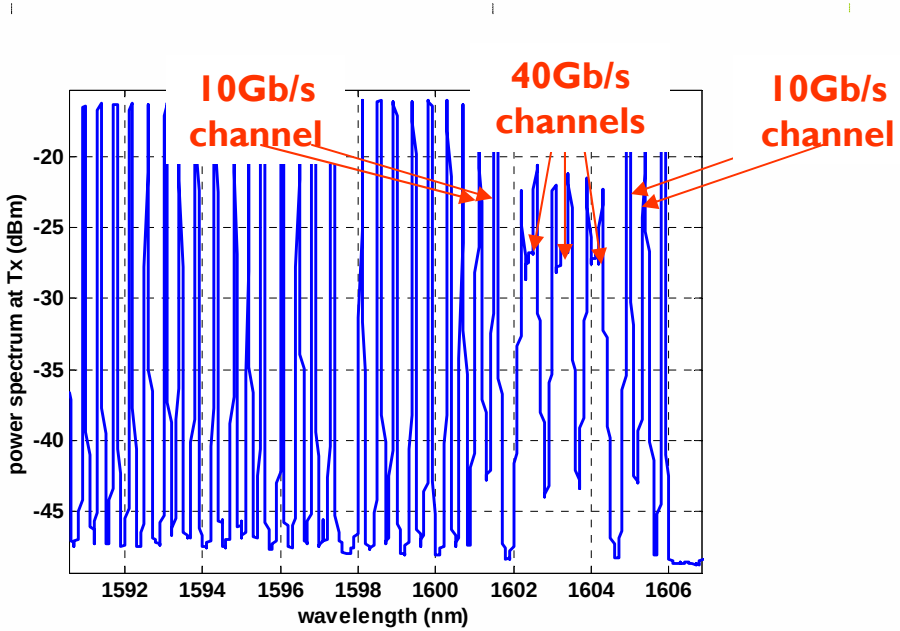

Next Gen Optical Transport Field Trial

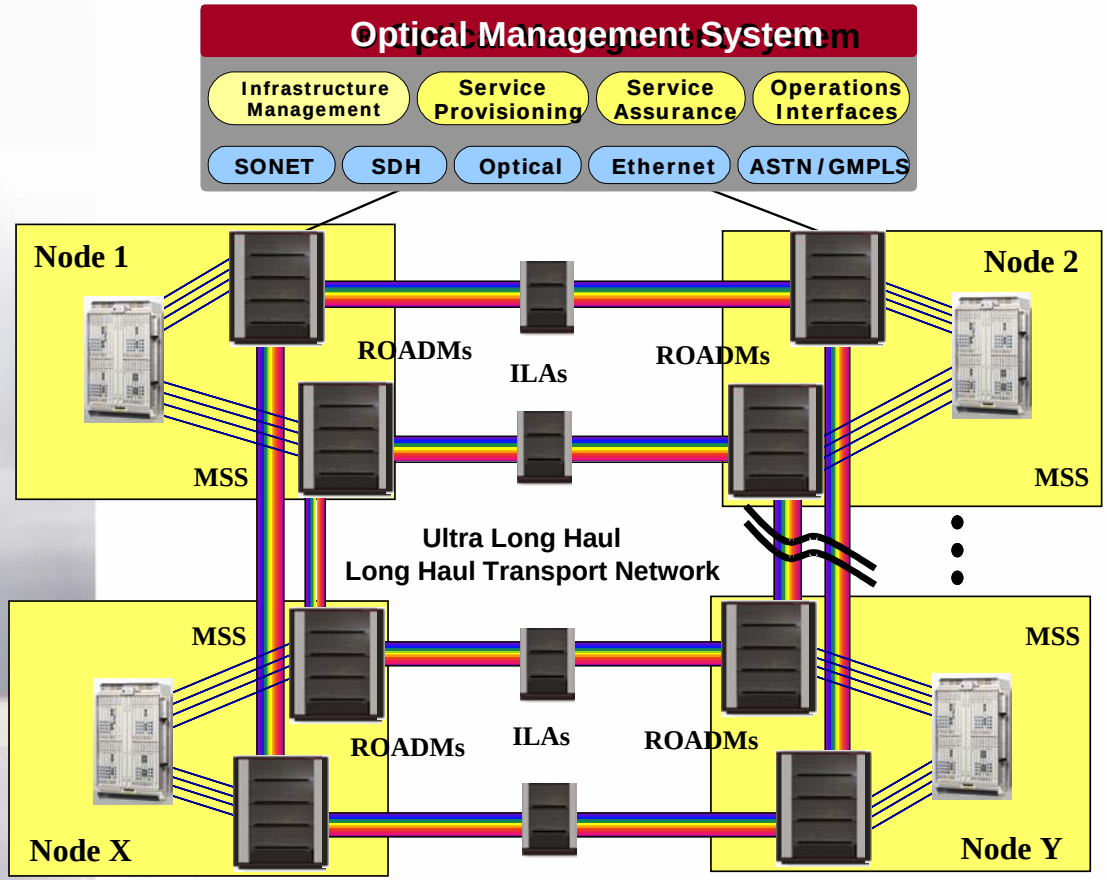

Key Qwest Requirements

- Dual-Rail
- 4F-BLSR
- Hybrid 10G/40G
- Network available *NOW*
- End-to-end circuit availability approaching five 9's
- Integration between NEs

Qwest
Spirit of Service™

Raman Amplifier Field Trial

- Nationwide All Raman Amplifier Field Trial
- Provides additional gain for high-loss spans
- Uses the transmission fiber as a gain medium
- Enables lower launch power
  - Improves OSNR characteristic
  - Minimizes non-linear effects

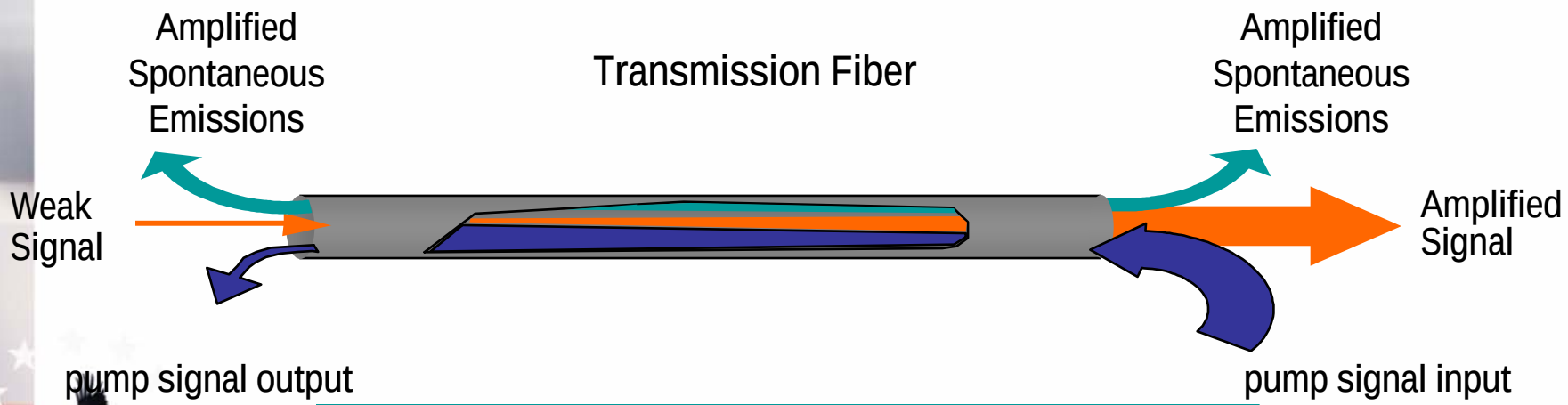

Increased OSNR margin can be used for more channels or more distance

Qwest Spirit of Service™

Field validation of Dynamic Channel Power Equalization

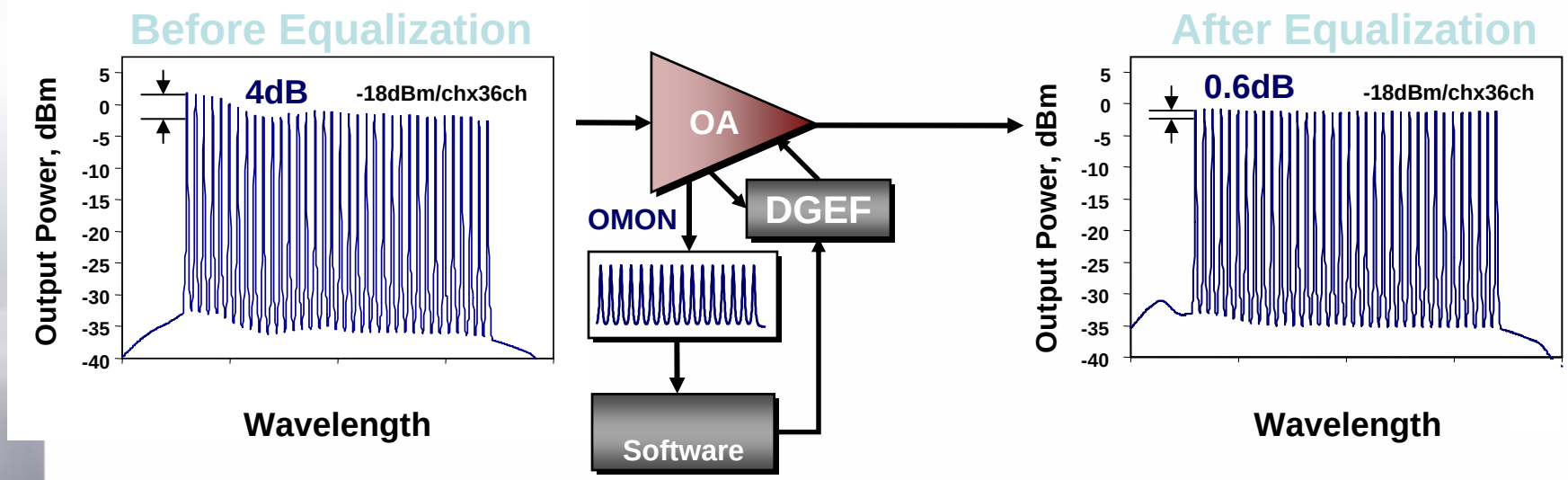

- **Dynamic gain equalization filters (DGEFs) in optical amplifiers automatically correct power divergence in the system due fiber cuts and equipment failures**
- **Transient behavior is key**

40G Coherent Modulation Trial

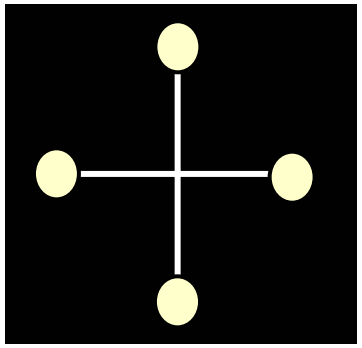

- **Coherent modulation extends reach to 2000+ km**
  - Offers up to a theoretical gain of 3 dB OSNR over OOK
  - More complex receiver design
  - Appears to be more tolerant to some nonlinear effects, chromatic dispersion and PMD
  - Late 2005/Early 2006

Qwest
Spirit of Service™

Thank You!

mark.stine@qwest.com